Firrhill High School	N4 N5	Space		**3.** Re-Entry

Section A

1. What happens to the temperature of a spacecraft when re-entering the earth's atmosphere?

2. Give three examples of how space travel can be dangerous.

Section B

1. In terms of particles in the air, explain what happens to a space craft during re-entry.

2. Give three examples of technology that has been developed as a result of space travel.

3. What is the term given to area with no particles in it? (Space is an example of this).

4. **Something different!**

   Write a paragraph about the 2003 Columbia space disaster. You should refer to what you have learned about re-entry.

Section C

1. When a spacecraft re-enters the Earth's atmosphere, some

A. Heat energy is transferred to potential energy
B. Heat energy is transferred to kinetic energy
C. Kinetic energy is transferred to potential energy
D. Potential energy is transferred to heat energy
E. Kinetic energy is transferred to heat energy

2. Which of the following would **not** reduce the heating effect of spacecraft on re-entry?
   A. Streamlining
   B. Using a heat-resistant material
   C. Reduce the size of spacecraft
   D. Time re-entry for evening
   E. Briefly take the spacecraft out of orbit

3. The picture below shows the average descent temperatures of different parts of the space shuttle

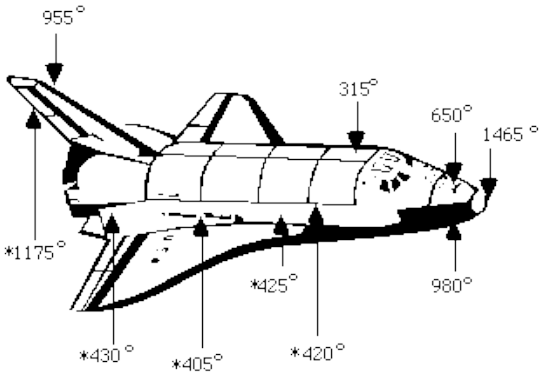

Which of the following statements is/are correct

I. As the number of particles from the atmosphere hitting the shuttle increases, the temperature of the shuttle increases
II. The particles in the space shuttle get bigger as it re-enters the atmosphere
III. The are less particles in the earth's atmosphere than there are in deep space

   A. I only
   B. II only
   C. III only
   D. I and II only
   E. I and III only

A spacecraft is used to transport astronauts and equipment to a space station. On its return from space the spacecraft must re-enter the Earth's atmosphere.
The spacecraft has a heat shield made from special silica tiles to prevent the inside from becoming too hot.

Why does the spacecraft increase in temperature when it re-enters the atmosphere? **2**

A spacecraft is orbiting the Earth. Scientists prepare to bring it back to the Earth's surface.
To safely enter the Earth's atmosphere, the speed of the spacecraft must be decreased. This is achieved by thruster rockets.

a) The thruster rockets are now switched off. A heat resistant tile breaks off the spacecraft. The force of gravity near the Earth causes both the spacecraft and the tile to accelerate towards the Earth.
   i. Complete the sentence by circling the correct phrase.

$$If\ there\ is\ no\ air\ resistance\ the\ tile\ will\ accelerate$$

$$at \begin{Bmatrix} a\ lower\ rate\ than \\ the\ same\ rate\ as \\ a\ faster\ rate\ than \end{Bmatrix} the\ spacecraft.$$

1

b) When the objects enter the Earth's atmosphere some of their kinetic energy is transformed into heat. **1**
   Name the force that causes this energy transformation.

The table below shows the different materials that can be used to build a spacecraft.

Material	***Melting Point (°C)***
Aluminium Metal	660
Copper Metal	1063
Alumina	2050
Fused Silica	1650
Soda-lime Glass	700
Polyethylene	120
Polystyrene	70

Draw a bar graph to show this information. **3**

Fused silica was commonly used as heat-proof lining for the space shuttle.
How many times greater is the melting point of fused silica compared to aluminium? **1**

In the future it is hoped that humans will be able to travel to Mars.

Using your knowledge of Physics, comments on the risks and benefits of space travel. **3**